| ECN | REV | DESCRIPTION | DATE | APPROVED |
|---|---|---|---|---|
| | | | | |

1. 芯 数/NO. of contacts

| 系 列/Series | 303 | 304 | 305 | 306 | 308 |
|---|---|---|---|---|---|
| 孔位排列/Pin Number | | | | | |
| 适配线缆/Conductor size | 22AWG | 22AWG | 22AWG | 24AWG | 24AWG |
| 导体直径/Pin size | 1.0mm | 1.0mm | 1.0mm | 0.8mm | 0.8mm |
| 额定电流/Rated current | 4A | 4A | 4A | 2A | 2A |
| 额定电压/Rated voltage | 250V | 250V | 60V | 30V | 30V |

2. 绝缘体型号/Insulator Coded

| Coded | A | B | D |
|---|---|---|---|
| 型号 | 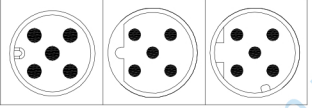 | | |

3. 编码原则/Part Number

浮动式插头/Free Plug P12E 305 A F S G1 K 7

- 主型号/Type
- 针数/Pin Number
- 绝缘体型号/Insulator coded:A、B、D
- 绝缘体类型/Insulator type:F=Female
- 针类型/Screw tpye:S=Screw
- 表面处理/Plating:Gold Flash
- 线夹/Collect
- 尾螺帽/Collect Nut:7--PG7
  9--PG9

4. 技术特性/Technical Characteristics

1. 寿命/Durability: >500 mate/unmate cycles
2. Pin接触电阻/ Pin Contact Resistance: ≤10 mΩ
3. 绝缘电阻/Nsulation Resistance: ≥ 100 MΩ
4. 温度等级/Rated Temperature: -25° C,+80° C
5. 盐雾/Corrosion Resistance: Salt spray test,>48h
6. 防水等级/Waterproof: IP67

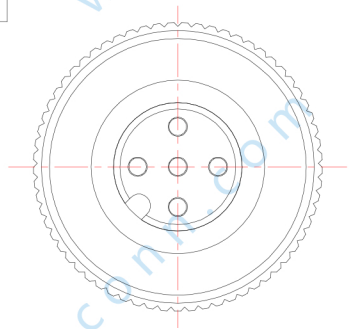

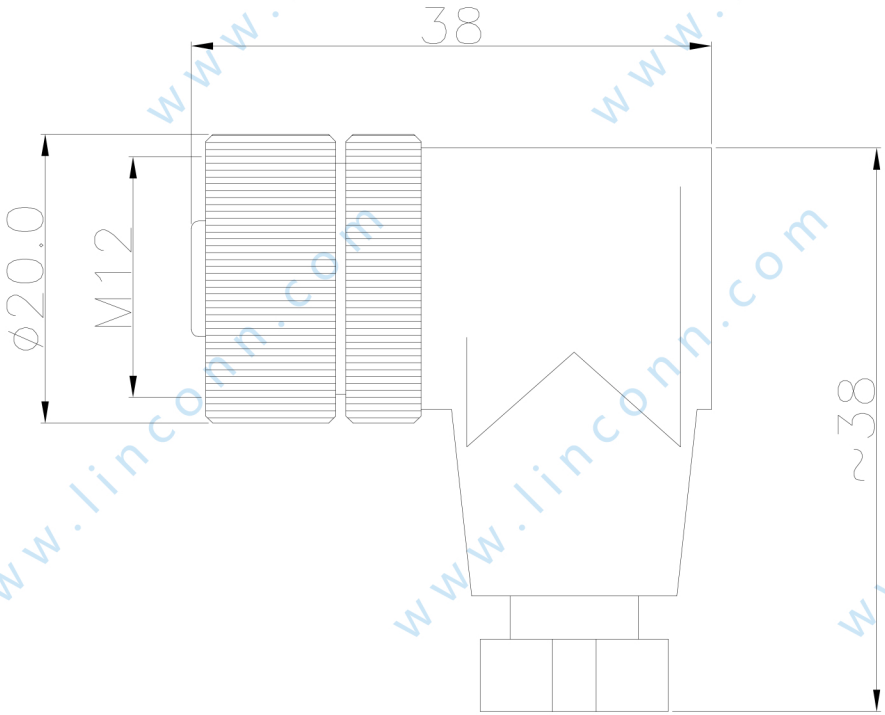


| | | | |
|---|---|---|---|
| SCALE F | TOLERANCES ARE: DECIMALES .X± .XX± ANGLES ± | TITLE: 浮动式插头/Free Plug | |
| SHEET 1 OF 1 | DIMENSION MM | APPROVALS / DATE | PART NO. P12E305AFSG1K7 REV. * |
| DWG NO. P12E | REV. A0 | APPROVED: / CHECKED: / CHECKED: / DRAWN: | LINCONN Linconn Elc Tech Co.,LTD |

www.linconn.com